Phase Leg Voltage Balancing of a Cascaded H-Bridge Converter Based STATCOM using Zero Sequence Injection

T.J. Summers†, R.E. Betz‡, G. Mirzaeva*
School of Electrical Engineering and Computer Science
University of Newcastle, Australia, 2308
email:†Terry.Summers@newcastle.edu.au;
‡Robert.Betz@newcastle.edu.au;
* Galina.Mirzaeva@newcastle.edu.au

Keywords

<<Static Synchronous Compensator>>, <<Multilevel Converter>>

Abstract

In cascaded H-bridge wye and delta connected STATCOMs the phase leg capacitor voltages can diverge, even under ideal balanced voltage conditions, due to different leg losses and capacitor values. This paper presents a novel strategy for achieving phase leg voltage balance for wye and delta connected STATCOMs by making use of zero sequence injection into the STATCOM. The proposed strategy also makes the STATCOM leg voltages tolerant to terminal voltage imbalance.

Introduction

Recently, considerable attention has been paid to the use of multi-level cascaded H-bridge converters in Static Synchronous Compensator (STATCOM) and drive applications [1–5]. The reasons for this are that:

1. Cascaded H-bridge converters are modular with the component count for the converter rising linearly with the number of levels required as opposed to quadratically for diode clamped and flying capacitor topologies.
2. With large numbers of levels, direct grid connection is feasible and voltage balance problems are arguably easier to solve for the cascaded topology than for either the diode clamp or flying capacitor converter.
3. In STATCOM applications only reactive power needs to be supplied. This means that only capacitors are required to supply the DC link voltage on each bridge. This eliminates the main disadvantage of this type of multilevel converter, that being an isolated power supply for each H-bridge.

The basic structure of a single phase leg of an m-level multilevel converter is shown in Fig. 1.

This paper addresses the problem of imbalance in the phase leg voltages of the STATCOM. Where phase leg voltage is defined as the sum of the capacitor voltages in each phase leg.

Under balanced conditions, if only reactive power is being supplied by the STATCOM, the net real power which flows into each phase leg of the converter, over one supply cycle, will be zero. Therefore, each phase leg voltage will remain constant, provided that there are no losses in the phase legs.

Authorized licensed use limited to: University of Newcastle. Downloaded on May 07,2010 at 09:55:41 UTC from IEEE Xplore. Restrictions apply.

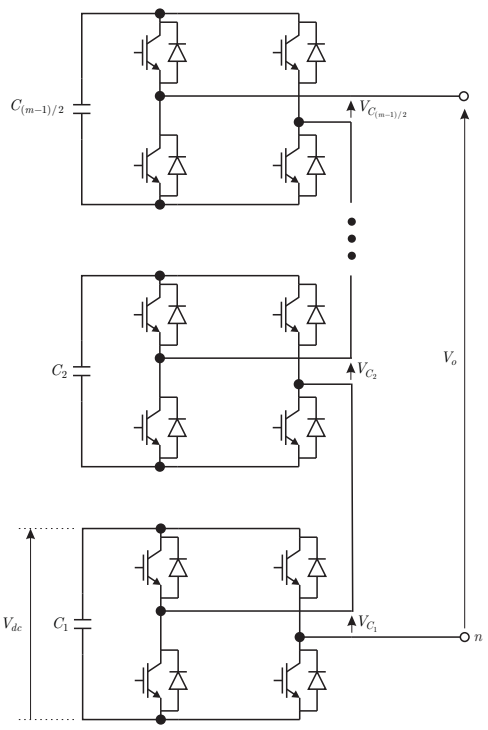

Fig. 1: m-level H-bridge multilevel cascade converter leg.

Phase leg voltage imbalance presents itself if there is a degree of imbalance in the supply, if the losses in the phase legs are unequal and if *PQ* theory [6] or a similar balanced approach is applied for reactive power compensation.

In [1] a control strategy was proposed which used separate control loops for controlling the overall amount of power into the STATCOM (*PQ* control), balancing the capacitors in each phase leg (so called individual balancing control) and balancing the phase leg voltages (clustered balancing control).

A similar strategy is proposed in this paper. That is, *PQ* control is employed to control the VArs and the total real power into the STATCOM. Individual bridge capacitor balancing control is carried out by measuring the voltage on each H-bridge and then, making use of the redundancy associated with the switching states, ensuring that when power is flowing into the phase leg the capacitors with the lowest voltages are charged. Conversely, when power is flowing out of the phase leg the capacitors with the highest voltages are discharged. This balancing method is similar in some respects to that utilised in [4]. The algorithm used by the authors has been explained in some detail in a companion paper however it worthwhile outlining it here for clarity.

The individual capacitor balance algorithm is made up of a sequence of steps, which are executed every control cycle:

1. All of the capacitor voltages of all the individual H-bridges in a phase leg are measured and the "effective"[1] capacitor voltages calculated.
2. The effective capacitor voltages are then ordered from lowest to highest.
3. If power is flowing out of the phase leg. That is the sign of the power is negative, reverse the order of the capacitor voltages.
4. Beginning with the first bridge in the array accumulate effective capacitor voltages until the addition of an extra bridge capacitor voltage exceeds the desired output voltage.
5. PWM the last bridge so that the precise average voltage over the control interval is achieved.

From the above explanation is is obvious that if power is flowing into a phase leg the bridges with the lowest capacitor voltages will be used to generate the desired voltage and be charged in the process. If

[1]This is the voltage that the capacitor can produce at the terminals of the H-bridge if a non-zero voltage is required from the bridge. It accounts for device voltage drops.

Authorized licensed use limited to: University of Newcastle. Downloaded on May 07,2010 at 09:55:41 UTC from IEEE Xplore. Restrictions apply.

power is flowing out of the phase leg the bridges with the highest capacitor voltages will be used and these capacitors will be discharged.

This process shares voltages across individual bridges in a phase leg very effectively however it will not regulate the overall phase leg voltage (cluster voltage).

The main topic addressed in this paper is the development of a *new technique* to implement phase leg voltage balancing.

Betz et al. [2] looked at using negative sequence injection into the point-of-common-coupling (PCC) to achieve load current symmetry compensation for both wye and delta connected cascaded H-bridge STATCOMs. The algorithm used zero sequence injection to balance the leg phase powers under this condition. An interesting possibility that arose from that work was the concept of more general phase leg voltage balance (also known as clustered balancing control) by using zero sequence currents or voltages for delta or wye connected STATCOMs respectively. The displacement power factor control algorithm uses three phase quantities to control the real and reactive power into the STATCOM. Real power is used to control the real power flowing into *all* the phases of the STATCOM. However, this is controlled in a three phase sense and the voltages on the individual phases are not controlled explicitly. The theory presented in [2] indicates that impressing a zero sequence voltage can be used to offer another degree of freedom with respect to controlling the power in the individual phases. (It should be noted that in [7], zero sequence components were utilised to achieve capacitor voltage balance in hybrid multilevel converters for drives, however the author's believe that this is a completely new technique for cascade H-bridge STATCOM balance control.)

The remainder of this paper develops expressions which show that the the impression of a zero sequence voltage onto the legs of a wye connected STATCOM, or the injection of zero sequence currents for the delta connected case, can be used as a novel and elegant method for phase leg voltage balance. In developing these expressions, terminal voltages present on the STATCOM are assumed to be balanced, or near enough to balanced, so that negative sequence voltages can be ignored.

Remark 1 *If a symmetry compensation method similar to that reported in [2] and [8] were utilised, using zero sequence components for cluster balance control becomes a natural choice.*

Phase Power Balancing using Zero Sequence Components

The Wye connected STATCOM

For the wye connected STATCOM a zero sequence voltage can be imposed upon the phase legs in order to affect the amount of power flowing into each phase leg. The advantage of using the zero sequence is that the injected voltages or currents do not have any effect on the terminal conditions of the STATCOM. It should be noted that while negative sequence currents could also be used for the same purpose this would have a deleterious effect on the grid which the STATCOM is connected to [2]. This effect, while small due to the relatively low powers involved, is nonetheless undesirable.

Let us define the voltages across the *a*, *b* and *c* phase legs respectively to be[2]:

$$\vec{\mathbf{V}}'_{\mathrm{a}} = \vec{\mathbf{V}}_{\mathrm{a}} + \vec{\mathbf{V}}_0 \tag{1}$$

$$\vec{\mathbf{V}}'_{\mathrm{b}} = \vec{\mathbf{V}}_{\mathrm{b}} + \vec{\mathbf{V}}_0 \tag{2}$$

$$\vec{\mathbf{V}}'_{\mathrm{c}} = \vec{\mathbf{V}}_{\mathrm{c}} + \vec{\mathbf{V}}_0 \tag{3}$$

where, $\vec{\mathbf{V}}_{\mathrm{a}}$, $\vec{\mathbf{V}}_{\mathrm{b}}$ and $\vec{\mathbf{V}}_{\mathrm{c}}$ are the positive sequence phase voltages and $\vec{\mathbf{V}}_0$ is the zero sequence component of the phase voltage which is impressed to achieve phase leg balance. Figure 2 shows the phasor definitions for a wye connected STATCOM.

This means that the individual phase apparent powers are then:

$$\vec{\mathbf{S}}_{\mathrm{a}} = \vec{\mathbf{V}}'_{\mathrm{a}}\vec{\mathbf{I}}^*_{\mathrm{ap}} \tag{4}$$

[2] $\vec{\mathbf{V}}$ denotes a phasor

Authorized licensed use limited to: University of Newcastle. Downloaded on May 07,2010 at 09:55:41 UTC from IEEE Xplore. Restrictions apply.

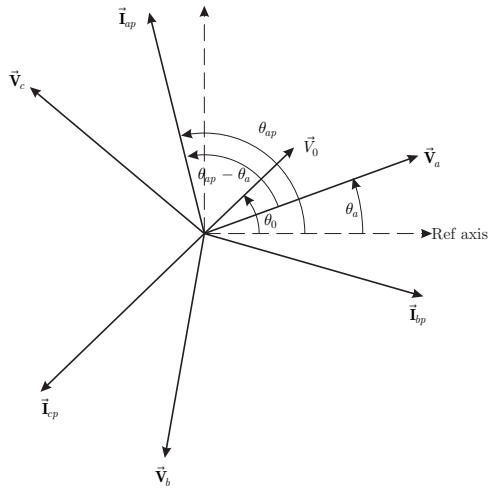

Fig. 2: Phasor definitions for a Y connected STATCOM.

$$\vec{\mathbf{S}}_{\mathrm{b}} = \vec{\mathbf{V}}'_{\mathrm{b}}\vec{\mathbf{I}}^*_{\mathrm{bp}} \tag{5}$$

$$\vec{\mathbf{S}}_{\mathrm{c}} = \vec{\mathbf{V}}'_{\mathrm{c}}\vec{\mathbf{I}}^*_{\mathrm{cp}} \tag{6}$$

where $\vec{\mathbf{I}}^*_{\mathrm{ap}}$ is the current that the STATCOM is supplying to the grid. Under the assumption of balanced voltages at the point of coupling these currents will be entirely positive sequence currents if reactive power compensation is desired.

Now, the real power in each phase is simply the real part of (4), (5) and (6). For example for phase-a:

$$\Re\left\{\vec{\mathbf{S}}_{\mathrm{a}}\right\} = \hat{V}\hat{I}_p[\cos(\theta_{ap}-\theta_a) + \frac{\hat{V}_0}{\hat{V}}\cos(\theta_{ap}-\alpha_0)] \tag{7}$$

Note that $\hat{X}$ denotes the RMS magnitude of phasor $\vec{\mathbf{X}}$, and $\vec{\mathbf{S}}$ denotes the complex power.

If we let the sum of the phase powers flowing into the STATCOM be equal to P then we get,

$$P = \sum_{k=a}^{k=c} \Re\left\{\vec{\mathbf{S}}_{\mathrm{k}}\right\}, \quad k \in [a,b,c] \tag{8}$$

If we are controlling the three phase power into the STATCOM via standard PQ theory then the power will be split evenly amongst the three phases of the STATCOM so (7) becomes:

$$\Re\left\{\vec{\mathbf{S}}_{\mathrm{a}}\right\} = \frac{P}{3} + \hat{V}_0\hat{I}_p\cos(\theta_{ap}-\alpha_0) \tag{9}$$

and

$$\Re\left\{\vec{\mathbf{S}}_{\mathrm{b}}\right\} = \frac{P}{3} + \hat{V}_0\hat{I}_p\cos(\theta_{ap}-\alpha_0-\frac{2\pi}{2}) \tag{10}$$

$$\Re\left\{\vec{\mathbf{S}}_{\mathrm{c}}\right\} = \frac{P}{3} + \hat{V}_0\hat{I}_p\cos(\theta_{ap}-\alpha_0+\frac{2\pi}{2}) \tag{11}$$

Now $\Re\left\{\vec{\mathbf{S}}_{\mathrm{a}}\right\}$, $\Re\left\{\vec{\mathbf{S}}_{\mathrm{b}}\right\}$ and $\Re\left\{\vec{\mathbf{S}}_{\mathrm{c}}\right\}$ are in effect the desired powers for each of the phase legs and $\frac{P}{3}$ is known and comes from the PQ control as mentioned previously. With this knowledge, (9) and (10) give us two equations with two unknowns (as the positive sequence current $\hat{I}_p\angle(\theta_{ap})$ is also fixed by the PQ control).

Authorized licensed use limited to: University of Newcastle. Downloaded on May 07,2010 at 09:55:41 UTC from IEEE Xplore. Restrictions apply.

If we let $\Re\left\{\vec{\mathbf{S}}_{\mathrm{a}}\right\} = P_a^*$, $\Re\left\{\vec{\mathbf{S}}_{\mathrm{b}}\right\} = P_b^*$ and $\Re\left\{\vec{\mathbf{S}}_{\mathrm{c}}\right\} = P_c^*$ then (9) and (10) can be written as:

$$P_a^* - \frac{P}{3} = \hat{V}_0 \hat{I}_p \cos(\theta_{ap} - \alpha_0) \tag{12}$$

$$P_b^* - \frac{P}{3} = \hat{V}_0 \hat{I}_p \cos(\theta_{ap} - \alpha_0 - \frac{2\pi}{3}) \tag{13}$$

From (13)

$$P_b^* - \frac{P}{3} = \hat{V}_0 \hat{I}_p \left[\cos(\theta_{ap} - \alpha_0)\cos(\frac{2\pi}{3}) + \sin(\theta_{ap} - \alpha_0)\sin(\frac{2\pi}{3})\right] \tag{14}$$

Dividing (14) by (12) gives us:

$$\frac{P_b^* - \frac{P}{3}}{P_a^* - \frac{P}{3}} = \frac{\cos(\theta_{ap} - \alpha_0)\cos(\frac{2\pi}{3}) + \sin(\theta_{ap} - \alpha_0)\sin(\frac{2\pi}{3})}{\cos(\theta_{ap} - \alpha_0)} = \cos(\frac{2\pi}{3}) + \tan(\theta_{ap} - \alpha_0)\sin(\frac{2\pi}{3}) \tag{15}$$

Equation (15) can be solved to give:

$$\boxed{\alpha_0 = \theta_{ap} - \arctan\left[\frac{2\left(\frac{P_b^* - \frac{P}{3}}{P_a^* - \frac{P}{3}}\right) + 1}{\sqrt{3}}\right]} \tag{16}$$

and

$$\boxed{\hat{V}_0 = \frac{P_a^* - \frac{P}{3}}{\hat{I}_p \cos(\arctan(\bigstar))}} \tag{17}$$

where

$$\bigstar = \frac{2\left(\frac{P_b^* - \frac{P}{3}}{P_a^* - \frac{P}{3}}\right) + 1}{\sqrt{3}}$$

Equations (16) and (17) define the angle and the RMS magnitude of the zero sequence voltage which has to be impressed upon the phase legs of a wye connected STATCOM in order to achieve the desired powers for phase leg balancing.

Remark 2 *The PQ algorithm generates current references for the wye connected STATCOM. Each leg of the STATCOM implements a voltage controlled current source. In order to allow the injection of the zero sequence voltage, one of the voltage controlled current sources can be converted to a voltage source. This voltage source can be used to inject the zero sequence voltage. The other two legs are still implemented as current sources. Since the star point of the STATCOM has no neutral connection, then the correct output currents will still be produced.* ■

The Delta Connected Case.

In the delta case, leg balancing is able to be achieved by injecting *zero sequence currents* around the delta, as compared to imposing a zero sequence voltage as in the wye connected case. The injection of these currents is very simple to implement, since the current references sent to the legs of the STATCOM simply need to be augmented by adding the required zero sequence current to them.

Authorized licensed use limited to: University of Newcastle. Downloaded on May 07,2010 at 09:55:41 UTC from IEEE Xplore. Restrictions apply.

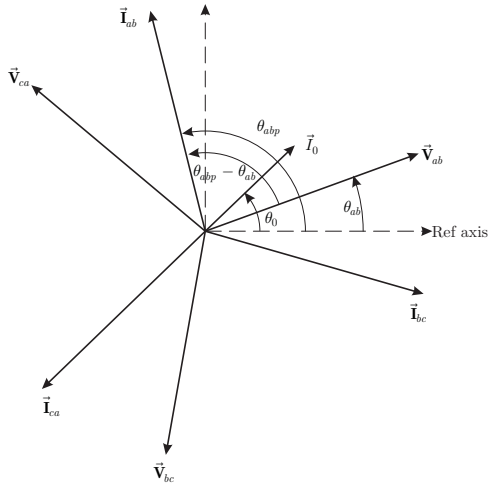

Fig. 3: Phasor definitions for a delta connected STATCOM.

For the delta connected case the appropriate equations for apparent power are:

$$\vec{\mathbf{S}}_{\mathrm{ab}} = \vec{\mathbf{V}}_{\mathrm{ab}}\vec{\mathbf{I}}^*_{\mathrm{ab0}} = \vec{\mathbf{V}}_{\mathrm{ab}}\left[\vec{\mathbf{I}}^*_{\mathrm{ab}} + \vec{\mathbf{I}}^*_0\right] \tag{18}$$

$$\vec{\mathbf{S}}_{\mathrm{bc}} = \vec{\mathbf{V}}_{\mathrm{bc}}\vec{\mathbf{I}}^*_{\mathrm{bc0}} = \vec{\mathbf{V}}_{\mathrm{bc}}\left[\vec{\mathbf{I}}^*_{\mathrm{bc}} + \vec{\mathbf{I}}^*_0\right] \tag{19}$$

$$\vec{\mathbf{S}}_{\mathrm{ca}} = \vec{\mathbf{V}}_{\mathrm{ca}}\vec{\mathbf{I}}^*_{\mathrm{ca0}} = \vec{\mathbf{V}}_{\mathrm{ca}}\left[\vec{\mathbf{I}}^*_{\mathrm{ca}} + \vec{\mathbf{I}}^*_0\right] \tag{20}$$

Now the delta current source values can be defined, using a space vector approach as in [2]:

$$\vec{\mathbf{I}}_{\mathrm{ab}} = \frac{1}{3}\left(\vec{\mathbf{I}}_{\mathrm{a}} - \vec{\mathbf{I}}_{\mathrm{b}}\right) \tag{21}$$

$$\vec{\mathbf{I}}_{\mathrm{bc}} = \frac{1}{3}\left(\vec{\mathbf{I}}_{\mathrm{b}} - \vec{\mathbf{I}}_{\mathrm{c}}\right) \tag{22}$$

$$\vec{\mathbf{I}}_{\mathrm{ca}} = \frac{1}{3}\left(\vec{\mathbf{I}}_{\mathrm{c}} + \vec{\mathbf{I}}_{\mathrm{a}}\right) \tag{23}$$

The phasor definitions for the delta connected case are shown in Fig. 3.
Substituting (21)–(23) into (18)–(20) we get:

$$\vec{\mathbf{S}}_{\mathrm{ab}} = \vec{\mathbf{V}}_{\mathrm{ab}}\left[\frac{1}{3}\left(\vec{\mathbf{I}}^*_{\mathrm{ap}} - \vec{\mathbf{I}}^*_{\mathrm{bp}}\right) + \vec{\mathbf{I}}^*_0\right] = \hat{V}_p\angle(\theta_{ab})\left[\frac{1}{3}\hat{I}_p\angle(-\theta_{ap})\left(1 - \angle(\frac{2\pi}{3})\right) + \hat{I}\angle(-\alpha_0)\right]$$

$$\therefore \vec{\mathbf{S}}_{\mathrm{ab}} = \frac{1}{\sqrt{3}}\hat{V}_p\hat{I}_p\angle\left(\theta_{ab} - \theta_{ap} - \frac{\pi}{6}\right) + \hat{V}_p\hat{I}_0\angle(\theta_{ab} - \alpha_0) \tag{24}$$

Further, expanding (19) and (20) in a similar fashion gives us:

$$\vec{\mathbf{S}}_{\mathrm{bc}} = \frac{1}{\sqrt{3}}\hat{V}_p\hat{I}_p\angle\left(\theta_{ab} - \theta_{ap} - \frac{\pi}{6}\right) + \hat{V}_p\hat{I}_0\angle(\theta_{ab} - \alpha_0 - \frac{2\pi}{3}) \tag{25}$$

and

Authorized licensed use limited to: University of Newcastle. Downloaded on May 07,2010 at 09:55:41 UTC from IEEE Xplore. Restrictions apply.

$$\vec{\mathbf{S}}_{\text{ca}} = \frac{1}{\sqrt{3}}\hat{V}_p\hat{I}_p\angle\left(\theta_{ab} - \theta_{ap} - \frac{\pi}{6}\right) + \hat{V}_p\hat{I}_0\angle(\theta_{ab} - \alpha_0 + \frac{2\pi}{3}) \tag{26}$$

Equations (24), (25) and (26) are each made up of two components. One component associated with the positive sequence voltages and currents ($\frac{1}{\sqrt{3}}\hat{V}_p\hat{I}_p\angle\left(\theta_{ab} - \theta_{ap} - \frac{\pi}{6}\right)$) and one component associated with the zero sequence current and positive sequence voltage. This is analogous with the apparent power expressions obtained for the Y-connected case.

We are concerned with real power here so

$$P_{ab} = \Re\{\vec{\mathbf{S}}_{\text{ab}}\} = \frac{1}{\sqrt{3}}\hat{V}_p\hat{I}_p\cos\left(\theta_{ab} - \theta_{ap} - \frac{\pi}{6}\right) + \hat{V}_p\hat{I}_0\cos(\theta_{ab} - \alpha_0) \tag{27}$$

$$P_{bc} = \Re\{\vec{\mathbf{S}}_{\text{bc}}\} = \frac{1}{\sqrt{3}}\hat{V}_p\hat{I}_p\cos\left(\theta_{ab} - \theta_{ap} - \frac{\pi}{6}\right) + \hat{V}_p\hat{I}_0\cos(\theta_{ab} - \alpha_0 - \frac{2\pi}{3}) \tag{28}$$

$$P_{ca} = \Re\{\vec{\mathbf{S}}_{\text{ca}}\} = \frac{1}{\sqrt{3}}\hat{V}_p\hat{I}_p\cos\left(\theta_{ab} - \theta_{ap} - \frac{\pi}{6}\right) + \hat{V}_p\hat{I}_0\cos(\theta_{ab} - \alpha_0 + \frac{2\pi}{3}) \tag{29}$$

Similarly to the reasoning in the previous section, if we are controlling the three phase power into the STATCOM, via standard PQ theory, then the power will be split evenly amongst the three phases of the STATCOM. Allowing

$$\frac{P}{3} = \frac{1}{\sqrt{3}}\hat{V}_p\hat{I}_p\cos\left(\theta_{ab} - \theta_{ap} - \frac{\pi}{6}\right)$$

and recognising that (27), (28) and (29) are the desired powers to be delivered to each leg of the STATCOM then,

$$P^*_{ab} = \frac{P}{3} + \hat{V}_p\hat{I}_0\cos(\theta_{ab} - \alpha_0) \tag{30}$$

$$P^*_{bc} = \frac{P}{3} + \hat{V}_p\hat{I}_0\cos(\theta_{ab} - \alpha_0 - \frac{2\pi}{3}) \tag{31}$$

$$P^*_{ca} = \frac{P}{3} + \hat{V}_p\hat{I}_0\cos(\theta_{ab} - \alpha_0 + \frac{2\pi}{3}) \tag{32}$$

Equations (30), (31) and (32) have exactly the same form as (9), (10) and (11) and consequently the solution for α_0 and $\hat{I}_0$ have the same form as the solutions for α_0 and $\hat{V}_0$ in the Y connected case.

That is:

$$\boxed{\alpha_0 = \theta_{ab} - \arctan\left(\frac{2\left(\frac{P^*_{bc} - \frac{P}{3}}{P^*_{ab} - \frac{P}{3}}\right) + 1}{\sqrt{3}}\right)} \tag{33}$$

and

$$\boxed{\hat{I}_0 = \frac{P^*_{ab} - \frac{P}{3}}{\hat{V}_p\cos\left(\arctan\left(\frac{2\left(\frac{P^*_{bc} - \frac{P}{3}}{P^*_{ab} - \frac{P}{3}}\right) + 1}{\sqrt{3}}\right)\right)}} \tag{34}$$

Authorized licensed use limited to: University of Newcastle. Downloaded on May 07,2010 at 09:55:41 UTC from IEEE Xplore. Restrictions apply.

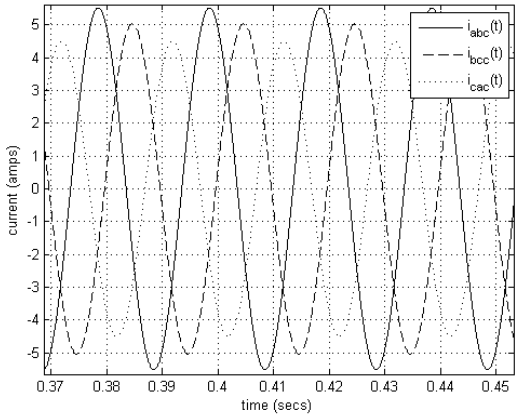

Fig. 4: Compensating Currents

Simulation Results

A simple test to confirm that the method was valid was conducted in MATLAB® . A delta connected STATCOM was simulated as current sources with unequal series resistances. The conditions for the simulation were: $\vec{\mathbf{V}}_{\text{ab}} = 100\angle 30^o$, $\vec{\mathbf{V}}_{\text{bc}} = 100\angle -90^o$, $\vec{\mathbf{V}}_{\text{ca}} = 100\angle 120^o$, $\vec{\mathbf{I}}_{\text{ab}} = \frac{5}{\sqrt{2}}\angle 120^o$, $\vec{\mathbf{I}}_{\text{bc}} = \frac{5}{\sqrt{2}}\angle 0^o$, $\vec{\mathbf{I}}_{\text{ca}} = \frac{5}{\sqrt{2}}\angle -120^o$. The series resistances in each leg used to simulate unequal losses in the phase legs were $R_{ab} = R_{ca} = 10\Omega$ and $R_{bc} = 5\Omega$.

Obviously with no compensation the losses in each of the phase legs under these conditions would be:125 watts in phase legs *ab* and *ca* and 62.5 watts in phase leg *bc*. If standard *PQ* theory was applied to account for the overall losses in the STATCOM then each bridge would be compensated with $104\frac{1}{6}$ watts (i.e. $\frac{P}{3} = 104\frac{1}{6}$). That is the ab and ca phases would discharge with time and the bc phase would charge.

Calculating zero sequence currents with magnitude and phase determined by (34) and (33) respectively gives $\hat{I}_0 \approx 0.4167$A and $\alpha_0 = 90^o$. Superimposing this current on $\vec{\mathbf{I}}_{\text{ab}}$, $\vec{\mathbf{I}}_{\text{bc}}$ and $\vec{\mathbf{I}}_{\text{ca}}$ gives compensating currents of:

$$\vec{\mathbf{I}}_{\text{abc}} \approx 3.90\angle 116.9^o \tag{35}$$

$$\vec{\mathbf{I}}_{\text{bcc}} \approx 3.56\angle 6.72^o \tag{36}$$

$$\vec{\mathbf{I}}_{\text{cac}} \approx 3.18\angle -123.8^o \tag{37}$$

The power which flows into each phase leg due to these compensating currents is: $20\frac{5}{6}$ watts, $-41\frac{2}{3}$ watts and $20\frac{5}{6}$ watts respectively. When added to $\frac{P}{3}$, from the *PQ* control, we have 125 watts flowing into the ab and bc phase legs and 62.5 watts in the bc leg. That is, the losses in each leg are compensated for precisely.

Figure 4 shows a plot of the instantaneous version of the compensating currents.

A similar test carried to the one described above was carried out in the Saber® simulation package. The STATCOM was simulated as three current sources connected in Δ. Unbalanced series resistances were included in the phase legs to simulate unbalanced loads. Again the value of these resistances was 10Ω for the *ab* and *ca* phases and 5Ω for the *bc* phase.

Authorized licensed use limited to: University of Newcastle. Downloaded on May 07,2010 at 09:55:41 UTC from IEEE Xplore. Restrictions apply.

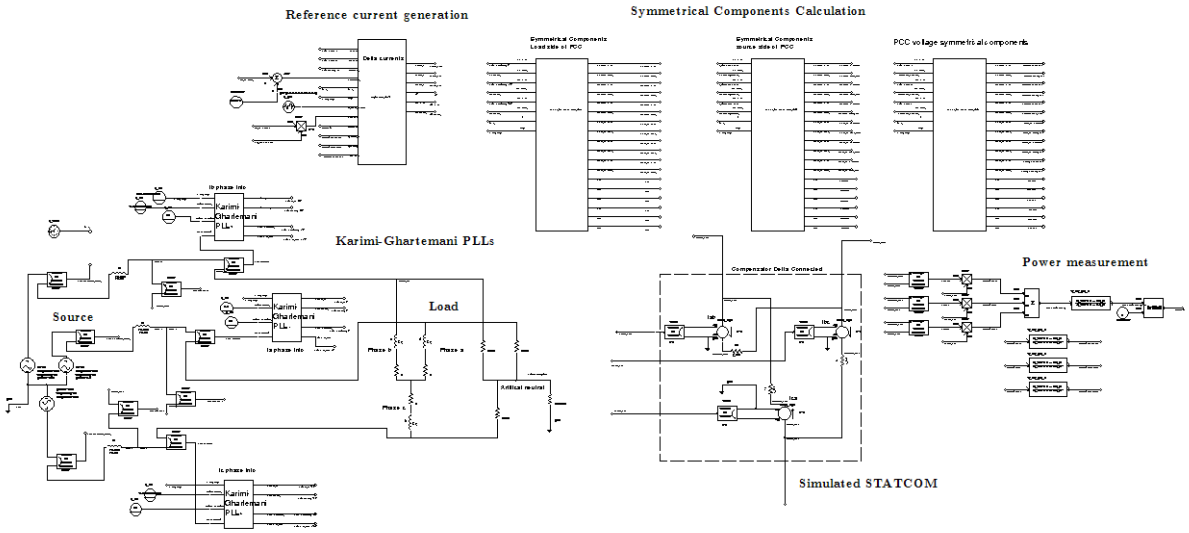

Fig. 5: Simulation block diagram

Karimi-Ghartemani phase locked loops (PLL's) [9] were used to detect the amplitude and phase of the voltage at the point of common coupling. so that these quantities could be used in (33) and (34). The three phase power (P) required in these same equations was measured by low pass filtering the instantaneous power in each of the phase leg resistors. These filtered quantities were then summed to obtain P. The instantaneous power desired in the ab phase and the bc phase (P^*_{ab} and P^*_{bc}) was simply the filtered instantaneous power in phase legs ab and bc respectively.

A block diagram of the simulation is shown in Figure 5. The block diagram has had many of the peripheral components removed for simplicity but it does show the pertinent components. The reference current generation block is used to calculate the STATCOM currents for control and the zero sequence currents for balancing the phase leg voltages. In this case phase currents of 5 amps peak amplitude were demanded from the current sources which simulated the STATCOM. These currents were purely reactive and led the phase voltages by 90°. The load was a balanced resistive load made up of 5Ω resistors connected in Y.

Figure 6 shows a results similar to those obtained from MATLAB. In the simulation 5 amperes, peak, balanced three phase currents were supplied by the current sources making up the simulated STATCOM until time $t = 0.91$ seconds. At this time, zero sequence compensation currents were added to the phase currents. The results obtained were almost identical to those obtained from pure theory verifying that the components of the system, the PLLs, current generators etc were operating as expected. This also verified that the strategy proposed does indeed shift the power between the phases of the STATCOM in order to compensate for imbalance in the phase legs.

Conclusion

The main contribution of this paper has been the development of a *new algorithm* for achieving phase leg voltage balance, under nominally balanced supply voltage conditions, for wye and delta connected STATCOMs. This strategy has been placed in context with the other control strategies such as PQ control and individual H-bridge capacitor voltage balance.

Many algorithms have been presented in the literature which are able to achieve the same function as the algorithm presented here. The attraction of this algorithm is that it has no dependence on the either the overall power balance nor the individual capacitor balance algorithm. Further, if symmetry compensation methods involving negative sequence injection are employed this algorithm may be a natural choice as all of the variables in algorithms equations would be already available.

Authorized licensed use limited to: University of Newcastle. Downloaded on May 07,2010 at 09:55:41 UTC from IEEE Xplore. Restrictions apply.

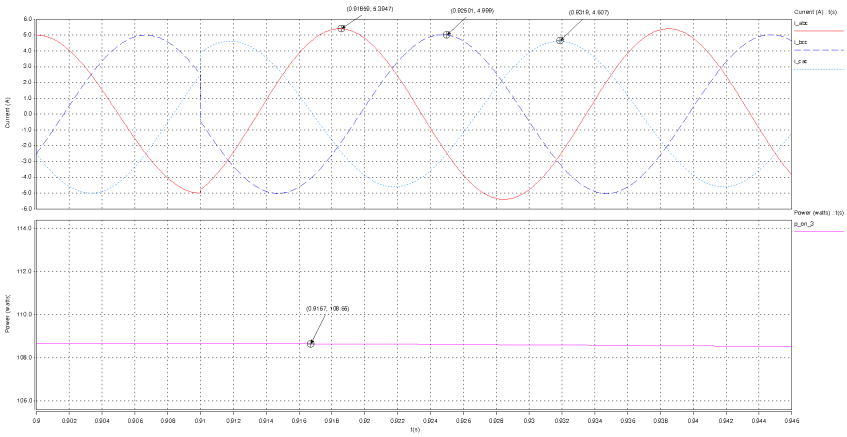

Fig. 6: Compensating currents from Saber® simulation

References

[1] T. Yoshii, S. Inoue, and H. Akagi, "Control and performance of a medium-voltage transformerless cascade PWM STATCOM with star-configuration," in *The 2006 IEEE Industry Applications Conference Forty-First IAS Annual Meeting, Conference Record of*, vol. 4, Tampa, FL, Oct. 2006, pp. 1716–1723.

[2] R. Betz, T. Summers, and T. Furney, "Symmetry compensation using a h-bridge multilevel statcom with zero sequence injection," *Industry Applications Conference, 2006. 41st IAS Annual Meeting. Conference Record of the 2006 IEEE*, vol. 4, pp. 1724–1731, Oct. 2006.

[3] F. Peng and J. Wang, "A universal statcom with delta-connected cascade multilevel inverter," in *35th Annual IEEE Power Electronics Specialist Conference, Aachen, Germany*. IEEE, 2004, pp. 3529–3533.

[4] D. Gerry, P. Wheeler, and J. Clare, "A voltage-balance strategy for multi-level, multi-cellular converters," in *CDROM Proceedings of the 10th EPE*, September 2003, iSBN 90-75815-07-7.

[5] J. Rodriguez, J.-S. Lai, and F. Z. Peng, "Multilevel inverters: a survey of topologies, controls, and applications," *IEEE Transactions on Industrial Electronics*, vol. 49, no. 4, pp. 724–738, 2002.

[6] H. Akagi, Y. Kanazawa, and A. Nabae, "Instantaneous reactive power compensators comprising switching devices without energy storage components," *IEEE Transactions on Industry Applications*, vol. 20, pp. 625–630, May/June 1984.

[7] Y. Chen, W. Liu, Q. Song, and Q. Yu, "PWM and capacitor voltage balance control strategies for hybrid 9-level inverter," *2004. PESC 04. 2004 IEEE 35th Annual Power Electronics Specialists Conference*, vol. 5, pp. 3465–3470, Jun. 2004.

[8] R. E. Betz and T. Summers, "Cascaded H-bridge STATCOM Operation when Rebalancing Unbalanced Voltages," in *The 7th International Conference on Power Electronics (ICPE-07)*, October 2007.

[9] M. Karimi-Ghartemani and M. R. Iravani, "A new phase-locked loop (PLL) system," in *Circuits and Systems, 2001. MWSCAS 2001. Proceedings of the 44th IEEE 2001 Midwest Symposium on*, vol. 1, Dayton, OH, Aug. 2001, pp. 421–424.

Authorized licensed use limited to: University of Newcastle. Downloaded on May 07,2010 at 09:55:41 UTC from IEEE Xplore. Restrictions apply.